Three Common Optical Amplifiers

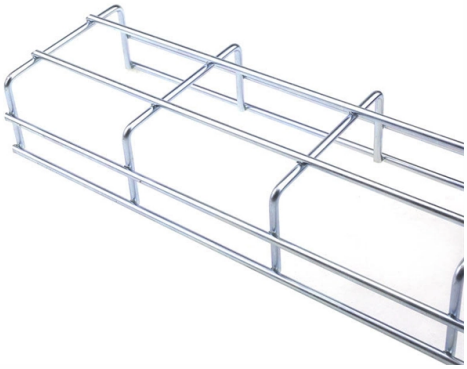

Overview

Optical Amplifiers Explained: Types, Working Principles & ApplicationsLearn the differences between EDFA, Raman, and Semiconductor Optical Amplifiers (SOA).

Key Takeaways

The three most common optical amplifiers are Erbium-Doped Fiber Amplifiers (EDFAs), Raman Amplifiers, and Semiconductor Optical Amplifiers (SOAs).1. Erbium-Doped Fiber Amplifiers (EDFAs)

EDFAs are the most widely used optical amplifiers in telecommunications. They consist of an optical fiber doped with erbium ions, which are excited by a pump laser (typically at 980 nm or 1480 nm). When the incoming optical signal passes through the doped fiber, it stimulates the excited erbium ions to emit photons, amplifying the signal through stimulated emission. EDFAs operate primarily in the C-band (1530–1565 nm) and L-band (1565–1625 nm), offering high gain, low noise, and the ability to amplify multiple wavelengths simultaneously, making them ideal for long-haul and WDM systems .

2. Raman Amplifiers

Raman amplifiers use the stimulated Raman scattering effect to amplify optical signals. A high-power pump laser interacts with the transmission fiber itself, creating a distributed gain medium along the fiber. This allows Raman amplifiers to provide wider wavelength coverage than EDFAs and can be used to boost signals in specific fiber sections. They are particularly useful in long-distance networks where signal attenuation needs to be compensated over extended spans .

3. Semiconductor Optical Amplifiers (SOAs)

© 2026 ALFA PRO COMMUNICATION SYSTEMS (Pty) Ltd - All rights reserved

SOAs use semiconductor materials to amplify optical signals. The principle is similar to EDFAs, but the gain medium is a semiconductor rather than a doped fiber. SOAs are compact, can operate over a broad wavelength range (400–2000 nm), and are capable of fast switching and wavelength conversion, making them suitable for local area networks and optical signal processing. However, they generally have higher noise and lower gain compared to EDFAs .

Summary

Each amplifier type has unique advantages and applications:

• EDFAs: High gain, low noise, ideal for long-haul and WDM systems.

• Raman Amplifiers: Distributed amplification, wide wavelength coverage, useful for long-distance fiber spans.

• SOAs: Compact, fast, suitable for local networks and signal processing, but with higher noise. These amplifiers are essential in modern optical communication systems, enabling long-distance, high-speed data transmission without the need for electrical regeneration .

Article Content

Optical Amplifiers Explained: Types, Working Principles & Applications

Learn the differences between EDFA, Raman, and Semiconductor Optical Amplifiers (SOA), their advantages,

Optical Amplifiers: A Comprehensive Guide

We will begin by discussing the different types of optical amplifiers, including Erbium-Doped Fiber Amplifiers (EDFAs),

Optical amplifier

There are several different physical mechanisms that can be used to amplify a light signal, which correspond to the major types of

Optical Amplifiers | How it works, Application

Explore the fundamentals of optical amplifiers, their types, applications in communication

Optical Amplifiers: A Comprehensive Guide

In this section, we will explore the principles and applications of three main types of optical amplifiers: Erbium-Doped

© 2026 ALFA PRO COMMUNICATION SYSTEMS (Pty) Ltd - All rights reserved

Optoamplifier Basics: Types, Specifications, and Applications

Explore optoamplifiers: EDFA, SOA, and Raman amplifiers. Understand their specifications, gain, bandwidth, and applications in

Optical Amplifiers – optical amplification

The main types are laser amplifiers, using stimulated emission (e.g., fiber amplifiers and semiconductor

Optical Amplifiers: SOA, TDFA, PDFA, and Hybrid

This article focuses on Semiconductor Optical Amplifiers (SOAs), Thulium-Doped Fiber Amplifiers

Optical Amplifiers PK□EDFA VS SOA VS FRA

EDFA, FRA, and SOA are three common optical amplifiers, each with distinct roles in signal

Optical Amplifier

An optical amplifier is, generically, any component that uses optical fiber as the amplification medium. In an optical amplifier, the

Various Optical Amplifiers (EDFA, FRA, and SOA)

An optical amplifier amplifies light as it is without converting the optical signal to an electrical signal, and is an extremely important

Optical Amplifiers – optical amplification

This article explains the fundamental principles of optical amplifiers, distinguishing between laser amplifiers, which use stimulated

What are Optical Amplifiers?

Explore the applications, types, advantages, and challenges of optical amplifiers in enhancing communication technology and signal

Optical Amplifiers for Access and Passive Optical Networks: A ...

Optical fiber amplifiers were invented back in 1964, three years after the first fiber laser was developed by Elias

Chapter 11 OPTICAL AMPLIFIERS

Optical amplifier, as the name implies, is a device that amplifies an input optical signal. The amplification factor or gain can be higher

fiberguide

© 2026 ALFA PRO COMMUNICATION SYSTEMS (Pty) Ltd - All rights reserved

fiberguide

Optical amplifiers

The SPIE Digital Library offers a comprehensive range of content on optical amplifiers, reflecting their significance in

Optical Amplifiers Face-off: EDFA vs FRA vs SOA

EDFA, FRA, and SOA are three common optical amplifiers, each with distinct roles in signal amplification and network

Optical Amplifier

The three main types of optical amplifiers are the erbium-doped fiber amplifier (EDFA), the Raman fiber amplifier (RFA) (see Chapter

Optical amplifiers, Part 1: Applications and considerations

This FAQ investigates the basic issues associated with optical amplifiers, including where and why they are needed

Optical Fibers and Cables

Can even be used for pre-amplification of the signal before detected electronically Introduction Fundamental of optical amplifiers

Types of Optical Amplifiers

Types of Optical Amplifiers : We will discuss about amplifiers used in optical networks, optical amplifier especially

Optical Amplifiers: Enhancing Signals in Photonics

Optical amplifiers optimize signal transmission in photonics, enabling efficient, long-distance communication through

The Ultimate Guide to Optical Amplifiers

Optical amplifiers have a wide range of applications, including telecommunications, materials science research, and

Optical Amplifier—EDFA (Erbium-doped Fiber Amplifier) for WDM

There are several types of fiber optic amplifiers: semiconductor optical amplifier (SOA), fiber Raman and Brillouin

Optical amplifiers and their applications

In the past few years research into all-optical amplification has been intensified. The performance expectations of both

© 2026 ALFA PRO COMMUNICATION SYSTEMS (Pty) Ltd - All rights reserved

Optical Amplifiers for Access and Passive Optical ...

The second part of the article focuses on optical amplifiers, their advantages and disadvantages, deployment, and

Lecture 8: Intro to Optical Amplifiers

Optical Amplifiers Three classes Booster (power) amplifiers: Boost power into transmission fiber, low NF, high Psat. In-line amplifiers:

Optical Amplifiers: SOA, TDFA, PDFA, and Hybrid Amplifiers

These amplifiers remain the standard for transoceanic and backbone networks, providing up to 12 Tb/s per fiber. Semiconductor

Optical Amplifier

An optical amplifier is, generically, any component that uses optical fiber as the amplification medium. In an optical amplifier, the

Various Optical Amplifiers (EDFA, FRA, and SOA)

An optical amplifier amplifies light as it is without converting the optical signal to an electrical signal, and is an extremely important

Optical Amplifiers – optical amplification

This article explains the fundamental principles of optical amplifiers, distinguishing between laser amplifiers, which use stimulated

What are Optical Amplifiers?

Explore the applications, types, advantages, and challenges of optical amplifiers in enhancing communication technology and signal

Optical Amplifiers for Access and Passive Optical Networks: A ...

Optical fiber amplifiers were invented back in 1964, three years after the first fiber laser was developed by Elias

Chapter 11 OPTICAL AMPLIFIERS

Optical amplifier, as the name implies, is a device that amplifies an input optical signal. The amplification factor or gain can be higher

What are optical amplifiers? Explain different types of front ...

Low-impedance front-end: i. Three basic amplifier configurations are frequently used in optical fiber communication receivers. ii. The

What is an Optical Amplifier? Need, working and classification of ...

© 2026 ALFA PRO COMMUNICATION SYSTEMS (Pty) Ltd - All rights reserved

Working of a basic optical amplifier An optical communication system basically contains a transmitter, a receiver and a fiber cable

Principles and Development of Optical Amplifiers

Optical amplifiers can directly amplify optical signals and have great application value in the field of communication.

Optical Amplifiers

Summary This chapter focuses mainly on three types of optical amplifiers: (1) the semiconductor optical amplifier

fiberguide

fiberguide

Optical amplifiers

The SPIE Digital Library offers a comprehensive range of content on optical amplifiers, reflecting their significance in

Optical Amplifiers Face-off: EDFA vs FRA vs SOA

EDFA, FRA, and SOA are three common optical amplifiers, each with distinct roles in signal amplification and network

Optical Amplifier

The three main types of optical amplifiers are the erbium-doped fiber amplifier (EDFA), the Raman fiber amplifier (RFA) (see Chapter

Optical Amplifiers Explained: Types, Working Principles & Applications

Learn the differences between EDFA, Raman, and Semiconductor Optical Amplifiers (SOA), their advantages,

Optical Amplifiers: A Comprehensive Guide

We will begin by discussing the different types of optical amplifiers, including Erbium-Doped Fiber Amplifiers (EDFAs),

Optical amplifier

There are several different physical mechanisms that can be used to amplify a light signal, which correspond to the major types of

Optical Amplifiers | How it works, Application

Explore the fundamentals of optical amplifiers, their types, applications in communication

© 2026 ALFA PRO COMMUNICATION SYSTEMS (Pty) Ltd - All rights reserved

Optical Amplifiers: A Comprehensive Guide

In this section, we will explore the principles and applications of three main types of optical amplifiers: Erbium-Doped

Optoamplifier Basics: Types, Specifications, and Applications

Explore optoamplifiers: EDFA, SOA, and Raman amplifiers. Understand their specifications, gain, bandwidth, and applications in

Optical Amplifiers – optical amplification

The main types are laser amplifiers, using stimulated emission (e.g., fiber amplifiers and semiconductor

Optical Amplifiers: SOA, TDFA, PDFA, and Hybrid

This article focuses on Semiconductor Optical Amplifiers (SOAs), Thulium-Doped Fiber Amplifiers

Optical Amplifiers PK□EDFA VS SOA VS FRA

EDFA, FRA, and SOA are three common optical amplifiers, each with distinct roles in signal

Optical Amplifiers Explained: Types, Working Principles & Applications

Learn the differences between EDFA, Raman, and Semiconductor Optical Amplifiers (SOA), their advantages,

Optical Amplifiers: A Comprehensive Guide

We will begin by discussing the different types of optical amplifiers, including Erbium-Doped Fiber Amplifiers (EDFAs),

Optical amplifier

There are several different physical mechanisms that can be used to amplify a light signal, which correspond to the major types of

Optical Amplifiers | How it works, Application

Explore the fundamentals of optical amplifiers, their types, applications in communication

Optical Amplifiers: A Comprehensive Guide

In this section, we will explore the principles and applications of three main types of optical amplifiers: Erbium-Doped

Optoamplifier Basics: Types, Specifications, and Applications

© 2026 ALFA PRO COMMUNICATION SYSTEMS (Pty) Ltd - All rights reserved

Explore optoamplifiers: EDFA, SOA, and Raman amplifiers. Understand their specifications, gain, bandwidth, and applications in

Optical Amplifiers – optical amplification

The main types are laser amplifiers, using stimulated emission (e.g., fiber amplifiers and semiconductor

Related Video Reference

This video was associated with the source search result. Verify technical details against current product documentation and project requirements.

Contact Us

Continue your research online:

Website: https://alfa-pro.co.za
Technical inquiry: https://alfa-pro.co.za/contact.html

This document is for preliminary research. Verify specifications against current standards, product documentation and project requirements.

© 2026 ALFA PRO COMMUNICATION SYSTEMS (Pty) Ltd - All rights reserved