Repairing Broadband Fiber Optic Cable Connectors

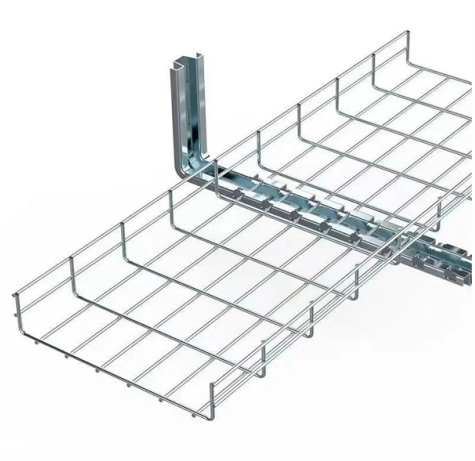

Overview

This article outlines five specific steps for repair: 1) Identify the break; 2) Cut out the damaged section; 3) Strip the cable; 4) Trim the fiber ends; 5) Test the repair. DIY fiber optic cable repair kits are increasingly popular for those who prefer home repairs. Let's explore how to keep your networks running smoothly in 2025 and beyond. Gather the. Fiber Optic Cable Repair Kits You May Need OTDR (Optical Time Domain Reflectometer) Utilized for measuring fiber length, transmission attenuation, joint attenuation, and pinpointing fault locations. Whether you're facing a complete cable break or troubleshooting performance degradation, we will equip you with the knowledge to understand, diagnose, and address. What Are the Common Reasons for Fiber Optic Cable Damage?

Fiber breaks can happen anywhere along the line, from underground ducts to indoor wiring. Proper handling is critical because fiber strands are extremely sensitive.

© 2026 ALFA PRO COMMUNICATION SYSTEMS (Pty) Ltd - All rights reserved

Article Content

How to Repair Fiber Optic Cable: The Complete Guide

Repairing fiber optic cables demands precision, the right tools, and knowledge of causes and techniques. This 2025 guide equips you to handle

How to Fix a Cut Fiber Optic Cable

While a cut or damaged fiber optic cable can temporarily take your network down, it is possible to quickly fix the cable with the right tools. This wikiHow article will teach you how to splice a

Fiber Optic Cable Repair: Quick and Effective Tips

Learn quick and effective tips for fiber optic cable repair. Discover tools, techniques, and safety practices to restore connectivity with minimal downtime.

Fiber Optic Cable Repair: Quick and Effective Tips

Learn practical fiber optic cable repair tips, common causes of fiber damage, essential repair tools, and a lot more to restore network performance quickly and effectively.

How to Repair Fiber Optic Cable at Home (What Actually Works)

Learn how to repair a fiber optic cable at home using fast connectors, what tools you need, and why most DIY fixes are only temporary. Discover when it''s better to replace the cable for a

How to Repair a Damaged Fiber Optic Cable?

Learn how to repair a damaged or cut fiber optic cable with step-by-step instructions, essential tools, and best practices. Restore your fiber cable quickly and ensure stable, low-loss

How To Repair Fiber Optic Wire

A cut or damaged fiber optic cable can disrupt your network, but it is repairable with the right tools and techniques. This guide provides essential steps for cutting and repairing broken fiber

How to Repair Fiber Optic Cables: A Step-by-Step Guide

When fiber cables sustain damage, specialized repair techniques help restore connectivity and maintain data integrity. This comprehensive guide outlines professional fiber optic

Fremont moves to expand broadband access in $7.7M deal with New

© 2026 ALFA PRO COMMUNICATION SYSTEMS (Pty) Ltd - All rights reserved

The city of Fremont is set to award a roughly $7.7 million grant to a New Jersey-based internet provider to operate the city''s fiber-optic cable network and offer internet service in areas with ...

Underground Fiber Optic Cable Jobs, Employment | Indeed

Patriot Broadband is seeking an experienced Fiber Splicer to join our growing outside plant construction team. The Fiber Splicer will be responsible for splicing, testing, troubleshooting, and documenting

Home Page

Designed to enhance your understanding of high-performance twisted-pair, fiber optic and intelligent infrastructure management solutions, CommScope

#ftth #fiberoptics #telecom #osp #fibersplicing #gpon #broadband # ...

It is commonly used to extend fiber cables, repair damaged fibers, and connect distribution cables within the network. □□ Why is Fiber Splicing Important?

Telecommunications & Wireless Market Research Reports ...

Access New Reports on Telecom & Wireless Our reports cover a wide range of markets within the telecommunications and wireless industry, including fiber optics, satellites and space,

Repairing a Broken Fiber Optic Cable

Scenario One: Step-by-Step Process to Repair a Broken Connector Step 1: Use the kevlar sheers to cut the fiber optic cable at the point of damage creating a clean

How to Repair Fiber Optic Cables: A Step-by-Step Guide

Introduction Fiber optic cables are critical components of modern communication networks, transmitting vast amounts of data at lightning speeds. However, physical damage can

Fibre Optic Network Design Principles – Wray Castle

Introduction to fibre optic network design Fibre optic network design is the structured engineering process of planning how optical fiber infrastructure connects buildings, campuses, cities,

96-core optical fiber terminal box□sc/lc/fc/st fully ...

A substandard splice box can turn a gigabit broadband connection into a frustrating 100mbps experience, make surveillance footage stutter like a powerpoint presentation, and send

How to Repair a Fiber Optic Cable

© 2026 ALFA PRO COMMUNICATION SYSTEMS (Pty) Ltd - All rights reserved

Understanding how to repair your damaged fiber optic cable will help you keep your network online when the unexpected strikes. Visit our site to learn how!

Related Video Reference

This video was associated with the source search result. Verify technical details against current product documentation and project requirements.

Contact Us

Continue your research online:

Website: https://alfa-pro.co.za
Technical inquiry: https://alfa-pro.co.za/contact.html

This document is for preliminary research. Verify specifications against current standards, product documentation and project requirements.

© 2026 ALFA PRO COMMUNICATION SYSTEMS (Pty) Ltd - All rights reserved