Huawei Fiber Optic Network Router Setup

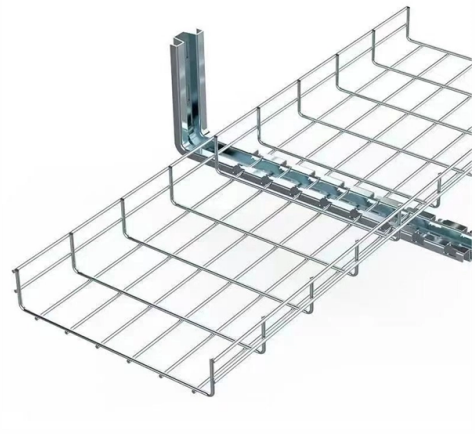

Overview

Learn about ''How can I set up the Internet for my new HUAWEI router on my computer''. Find all usage guide, troubleshooting tips and resources for your HUAWEI product.

Key Takeaways

Setting up a Huawei fiber optic router involves connecting the fiber to the ONT, linking the ONT to the router, and configuring your network via the web-based management page. Step 1: Connect the Fiber Optic CableLocate the fiber optic wall outlet provided by your ISP. Connect the fiber optic cable to the Optical Network Terminal (ONT), which converts the fiber signal into Ethernet.

Power on the ONT and wait for the status lights to stabilize, usually 2–5 minutes. Step 2: Connect the RouterUse an Ethernet cable to connect the ONT's LAN port to the WAN port on your Huawei router. If your router has self-adaptive ports, any port may work.

Then, plug in the router to a power source and wait for the indicator lights to confirm it is powered on. Step 3: Access the Router Management PageOpen a web browser on a connected computer or device and enter the router's default IP address (usually printed on the label, e.g., 192. 168.

100. 1). Log in using the default credentials (commonly admin/admin) and follow the setup wizard.

Step 4: Configure Internet SettingsThe router will attempt to detect your Internet access mode automatically. If it cannot, select DHCP manually. Enter your broadband account and password provided by your ISP.

© 2026 ALFA PRO COMMUNICATION SYSTEMS (Pty) Ltd - All rights reserved

For advanced users, you can also configure IP address, subnet mask, gateway, DNS servers, and VLAN settings if required by your ISP. Step 5: Set Up Wi-FiCreate a new Wi-Fi network name (SSID) and password. You can also set a login password for the router's web management page.

Save the settings to apply them. Step 6: Connect DevicesWired devices: Use Ethernet cables to connect computers, set-top boxes, or other devices to the router's LAN ports. Wireless devices: Connect phones, tablets, laptops, and other Wi-Fi-enabled devices to the newly configured Wi-Fi network.

Tips

For Huawei models like HG8145V5, skip advanced QoS or VLAN settings unless using VoIP or IPTV services.

Ensure the ON

T and router are compatible with your ISP's fiber service. Some setups may require an SFP GPON module like the Huawei MA5671A for direct fiber-to-router connections. Always check the router label for default credentials and IP addresses to avoid login issues.

Following these steps will allow you to quickly set up your Huawei fiber optic router and connect both wired and wireless devices to the Internet.

Article Content

How can I set up the Internet for my new HUAWEI router on my

Learn about ''How can I set up the Internet for my new HUAWEI router on my computer''. Find all usage guide, troubleshooting tips and resources for your HUAWEI product.

The Easiest Fiber Huawei Router Setup GUIDE!

The Easiest Fiber Huawei Router Setup GUIDE! "In this video, we''ll show you how to set up Huawei Fiber Router easily. If you''re looking to configure your Huawei Router, this...

How to Configure Huawei HG8145V5 Router: A Practical Guide

Step-by-step guide to accessing, configuring, and optimizing your Huawei HG8145V5 ONT/router — covers login, Wi-Fi setup, reset, security, and real-world trade-offs.

Quick Installation Guide for Optical Network Router

© 2026 ALFA PRO COMMUNICATION SYSTEMS (Pty) Ltd - All rights reserved

Step 1: Follow instructions below to perform fibre patching. As fibre optic cables are made of glass, please do not bend sharply and ensure the bending diameter is larger than 60 mm. Step 2: Connect

Huawei OptiXstar HG8145V5 Manual | ManualsLib

Install devices only by professional personnel. Do not install devices without permission. During device installation, the installation professional personnel need to inform the user of how to log in to the web

How to Configure a Huawei Router?

Huawei is one of the leading suppliers in the router market, and in this article we will show you everything you need to know to configure a Huawei router. These devices are essential for

Setup Huawei MA5671A SFP GPON for Your Fiber ISP

Did you know that you can replace the fiber optic modem/router supplied by your internet service provider (ISP) with a simple SFP stick that runs Linux and does the mapping of light into

How to Setup Easly Huawei Fiber Router

huawei fiber optic router configuration,huawei fiber optic modem configuration,huawei fiber optic router ip,huawei fiber router setup,huawei fiber optic rout...

Review and Guide to the Huawei Fiber Router: A ...

The blog provides a detailed review of the Huawei Fiber Router, explaining its function, setup process, and key features like 1GE and 3FE ports, Wi-Fi, voice support, and English software.

Huawei EchoLife HG8240H GPON Terminal (Fibre Modem) – Full Set

Selling a pre-owned, fully functional Huawei EchoLife HG8240H GPON Terminal (Optical Network Terminal / Fibre Modem). Ideal as a direct replacement unit for local fiber broadband setups (Singtel,

Huawei HG8245H Optical Network Terminal ONT

Buy Huawei HG8245H Optical Network Terminal ONT in Singapore,Singapore. - Huawei HG8245H ONT (Fiber Optic Terminal) - Includes power adapter - Includes yellow fiber optic cable - All ports

Huawei OptiXstar HG8145X6-10 ONT User Manual

Huawei OptiXstar HG8145X6-10 ONT User Manual: installation, Wi-Fi 6 setup, troubleshooting, technical specifications. Read online; save as PDF.

© 2026 ALFA PRO COMMUNICATION SYSTEMS (Pty) Ltd - All rights reserved

Enterprise High-Availability: VRRP, MLAG & ECMP Explained

Eliminate network downtime with our 2026 High-Availability guide. Compare VRRP, MLAG, and ECMP to build a fault-tolerant multi-vendor network architecture.

HUAWEI HG8245 SERIES QUICK START MANUAL Pdf Download

View and Download Huawei HG8245 series quick start manual online. EchoLife Gateway GPON Terminal. HG8245 series network router pdf manual download. Also for: Hg8247 series, Hg8447 series.

Pag-troubleshoot sa Huawei MA5608T vs MA5800-X2: Mga Optical

Kapag nagpaplano ng pag-upgrade ng network o bagong FTTH/FTTB deployment, napakahalagang maunawaan ang pagkakaiba sa pagitan ng Huawei MA5608T at MA5800-X2. Parehong mahalaga

Huawei eKitOptiX FG736 WiFi 7 Router

S$50 | - Huawei eKitOptiX FG736 Router - Latest WiFi 7 technology - Blazing fast 3600Mbps speeds - 2 x 2.5 Gigabit LAN/WAN ports - Simple one-click Mesh Networking - Perfect for a speedy and stable

Ang Pinakamahusay na Gabay sa Huawei MA5800 OLT Configuration ...

Huawei SmartAX MA5800 Ang serye, na kinikilala bilang unang distributed architecture ng industriya na OLT na may magkakahiwalay na control at forwarding plane, ay kumakatawan sa isang

Corporate Information

Huawei''s AirPON solution was commercially deployed by over 30 carriers around the world, leveraging wireless sites and optical fiber resources to make site

Related Video Reference

This video was associated with the source search result. Verify technical details against current product documentation and project requirements.

© 2026 ALFA PRO COMMUNICATION SYSTEMS (Pty) Ltd - All rights reserved

Contact Us

Continue your research online:

Website: https://alfa-pro.co.za
Technical inquiry: https://alfa-pro.co.za/contact.html

This document is for preliminary research. Verify specifications against current standards, product documentation and project requirements.

© 2026 ALFA PRO COMMUNICATION SYSTEMS (Pty) Ltd - All rights reserved