Function of South Asia Temperature Control Distribution Box

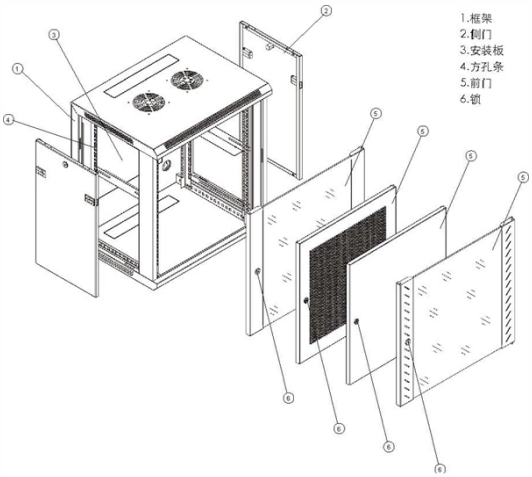

Overview

Temperature Control Distribution Box Protects sensitive temperature control instruments from environmental hazards and ensures stable power supply. Ensure.

Key Takeaways

A South Asia Temperature Control Distribution Box maintains precise temperature conditions for perishable or sensitive products during storage and transport, ensuring product quality, safety, and regulatory compliance.Core Function

The primary function of a temperature control distribution box is to preserve the required temperature range for products such as vaccines, pharmaceuticals, seafood, and perishable foods throughout the supply chain. This ensures that the products remain effective, safe, and fresh from the point of origin to the end destination, even in regions with hot and humid climates or unreliable power supply .

Key Components and Mechanisms
• Insulation and Cooling Materials: The box uses high-performance insulation materials like foam, aerogels, or vacuum panels, combined with cooling agents such as gel packs or phase change materials, to maintain a stable internal environment .

• Active or Passive Temperature Control: Some boxes integrate battery-powered cooling devices for active temperature regulation, while others rely on passive insulation and pre-cooled packs .

© 2026 ALFA PRO COMMUNICATION SYSTEMS (Pty) Ltd - All rights reserved

• Sensors and Monitoring: Temperature sensors or data loggers continuously monitor internal conditions. Advanced systems may include GPS tracking and remote alerts to detect temperature excursions in real-time .

• Sealing and Packaging Design: Proper sealing prevents external environmental influences, ensuring that the internal temperature remains consistent during transit .
Applications in South Asia

In South Asia, these distribution boxes are critical for cold chain logistics, particularly for vaccines, medicines, and perishable foods. They help:

• Prevent spoilage and maintain efficacy of temperature-sensitive products .

• Reduce wastage due to temperature deviations during transport .

• Ensure compliance with health and safety regulations, especially in regions with variable infrastructure .
Integration with Cold Chain Systems

The distribution box functions as part of a larger temperature-controlled logistics network, which includes refrigerated vehicles, warehouses, and handling protocols. Sensors in the box communicate with controllers to adjust cooling or alert operators if temperatures deviate from the set range, maintaining the integrity of the cold chain .

Summary

A South Asia Temperature Control Distribution Box is an essential tool in modern logistics, protecting temperature-sensitive goods from environmental fluctuations, ensuring product quality, and supporting regulatory compliance. Its combination of insulation, cooling, monitoring, and secure packaging makes it indispensable for cold chain operations in the region .

Article Content

Complete Guide For Distribution Boxes Types

The correct choice and installation of distribution boxes are crucial for electrical safety, efficiency, and reliability. This guide provides

© 2026 ALFA PRO COMMUNICATION SYSTEMS (Pty) Ltd - All rights reserved

Contact Us

Continue your research online:

Website: https://alfa-pro.co.za
Technical inquiry: https://alfa-pro.co.za/contact.html

This document is for preliminary research. Verify specifications against current standards, product documentation and project requirements.

© 2026 ALFA PRO COMMUNICATION SYSTEMS (Pty) Ltd - All rights reserved